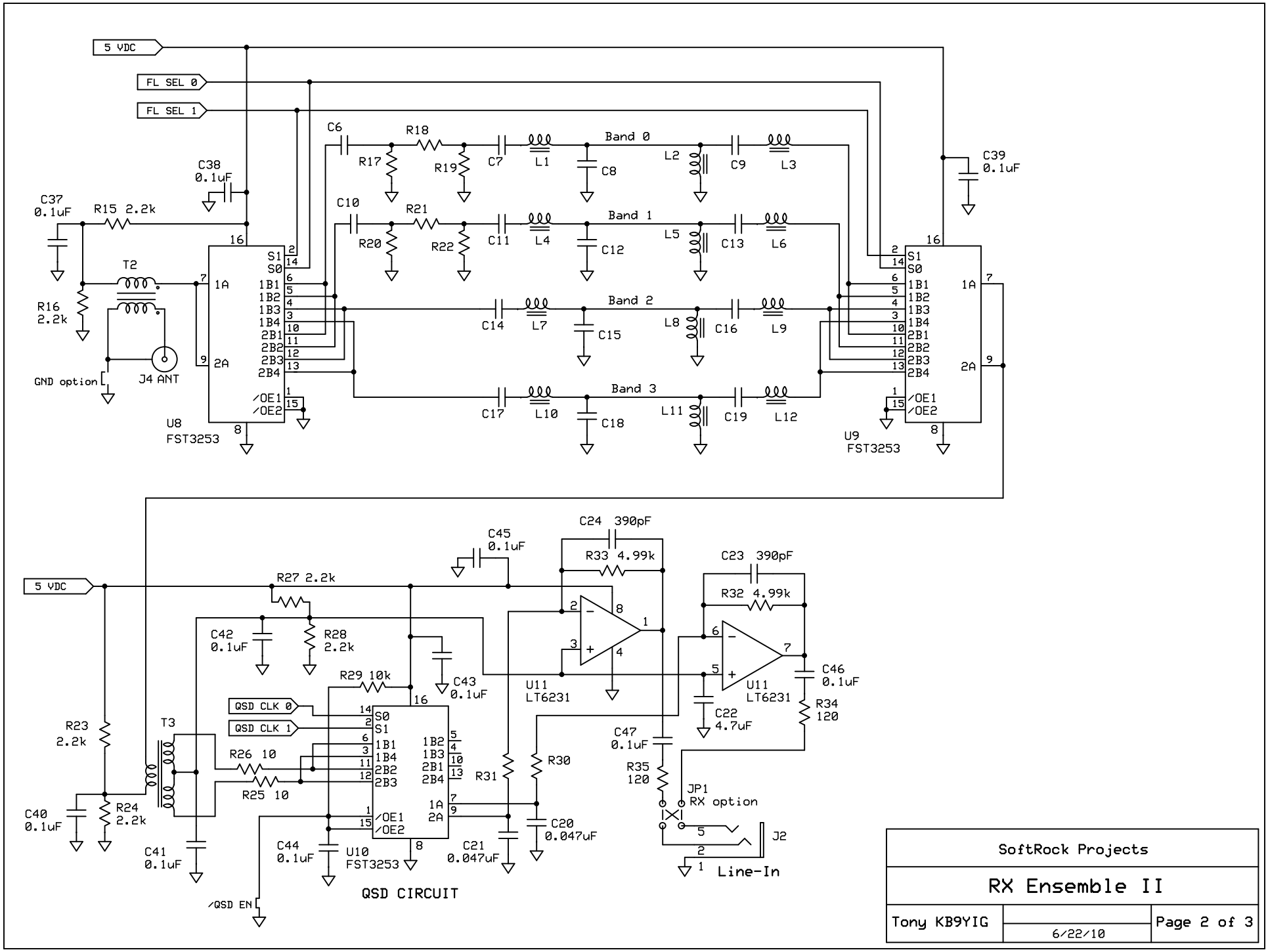

SoftRock Projects		
RX Ensemble II		
Tony KB9YIG	6/22/10	Page 2 of 3